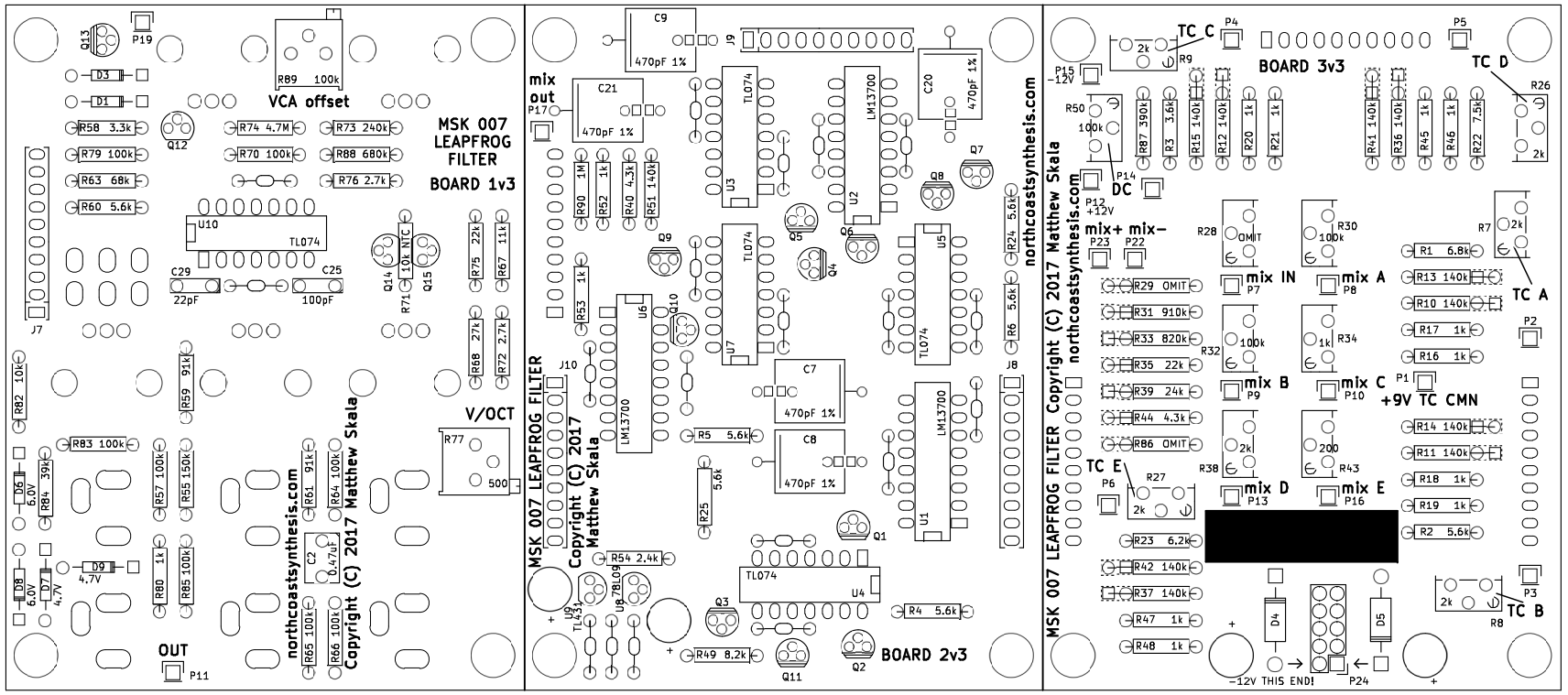

MSK 007 LEAPFROG FILTER

$Id: leapfrog.kicad_pcb 5692 2017-10-20 22:54:20Z mskala $ | 1/3